Canadian EMV and Interac/PCI Upgrade Path for Triton Embedded ATMs
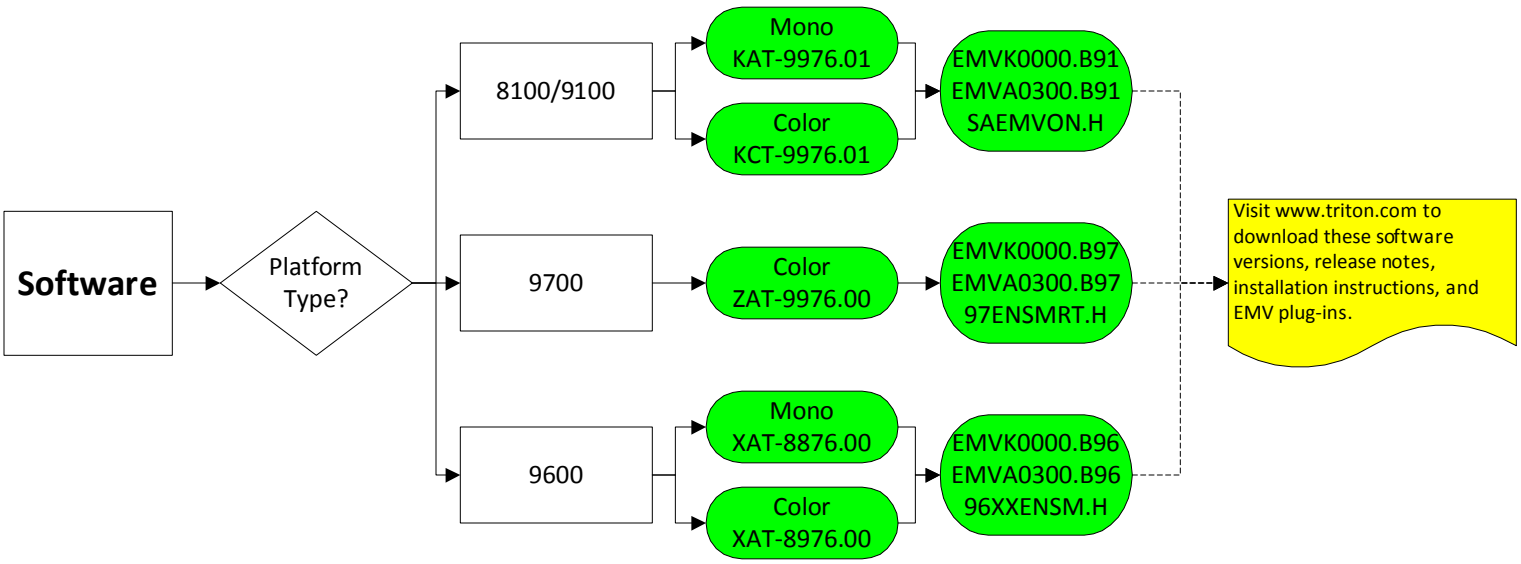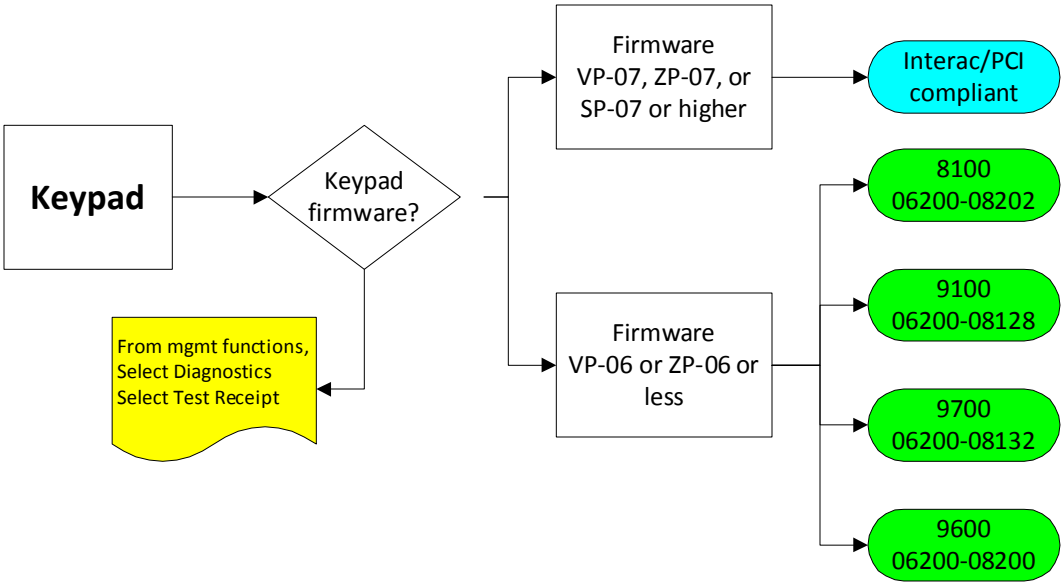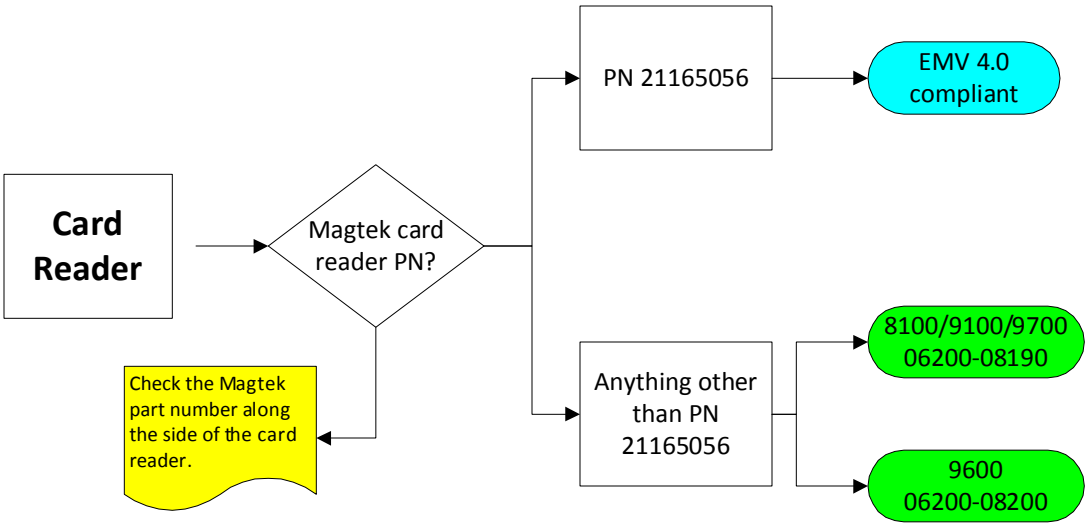
8100, 9100, 9600, 9700